E
M
S
S

# Powered Stair Climber

## EMSS-19B-2

# Description

# Introduction

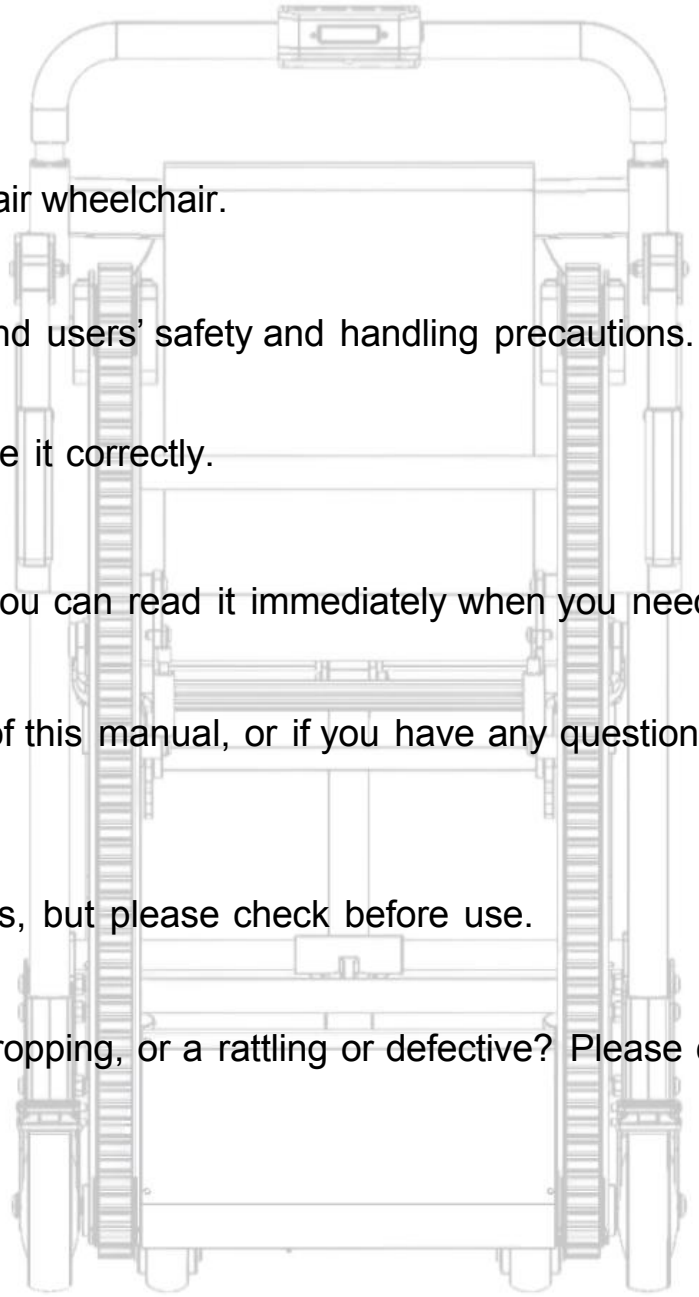

- Thank you for purchasing a portable mobile stair wheelchair.
- This manual describes how to use products and users' safety and handling precautions.
- Be sure to read well before purchasing and use it correctly.
- Please keep this manual in your hand so that you can read it immediately when you need it.
- If you have any questions about the contents of this manual, or if you have any questions, please contact us or dealers.
- At the time of shipment, we have sufficient tests, but please check before use.
- Is there any damage to parts, a bolt and nut dropping, or a rattling or defective? Please check.

# Precaution

- This carry patient to the stairs up and down. Do not use for anything other than the original purpose.
- Do not use when there is a failure or abnormality.
- Do not use if it rains or if the road is wet. It may slip down.
- Do not approach the fire, as the motor or battery may be ignited.
- Please do not use with the maximum loading capacity of more than 180 kg.
- Please do not use special stairs. (Stairs, stairs, stepladder, etc.)
- If you use it for a long time, do not use it if it gets hot, such as a battery or motor.
- When using it as a wheelchair, it is dangerous to use it on a groove or a long rise and downhill.
- When using the elevator, be sure to make sure that the wheels do not fall in the gap in the door.
- Please check, clean and maintain regularly.

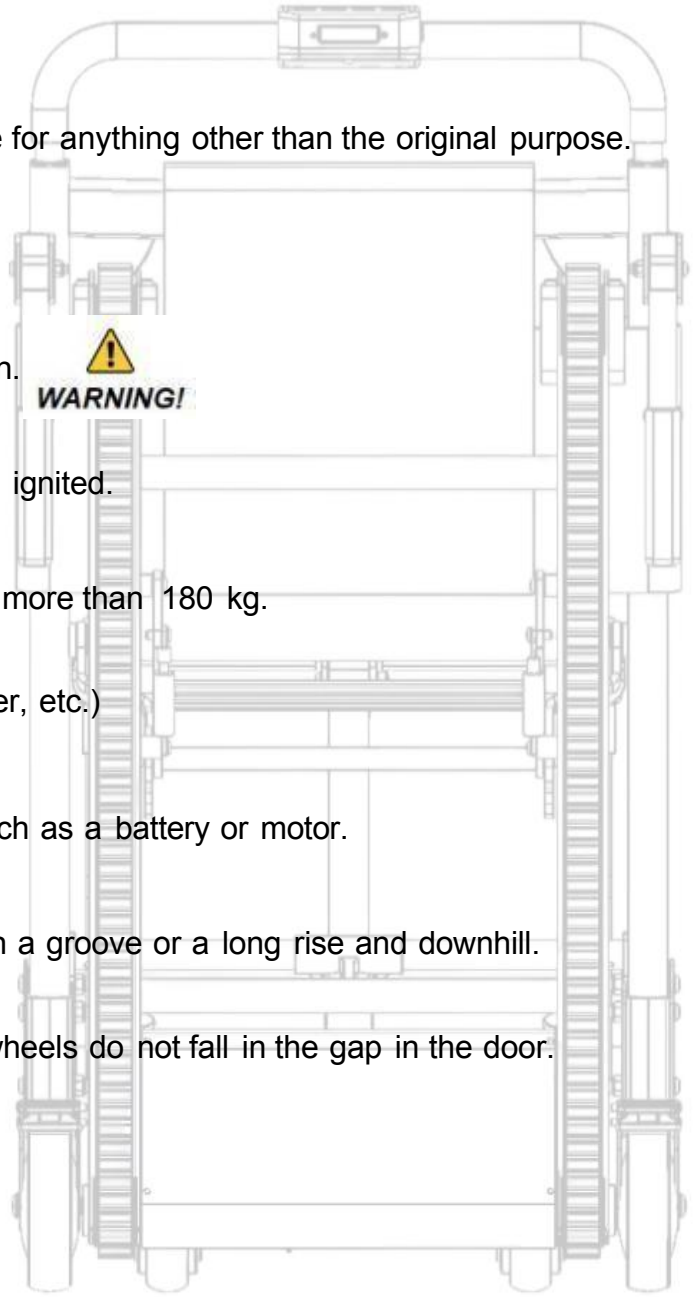

# Technical Specifications

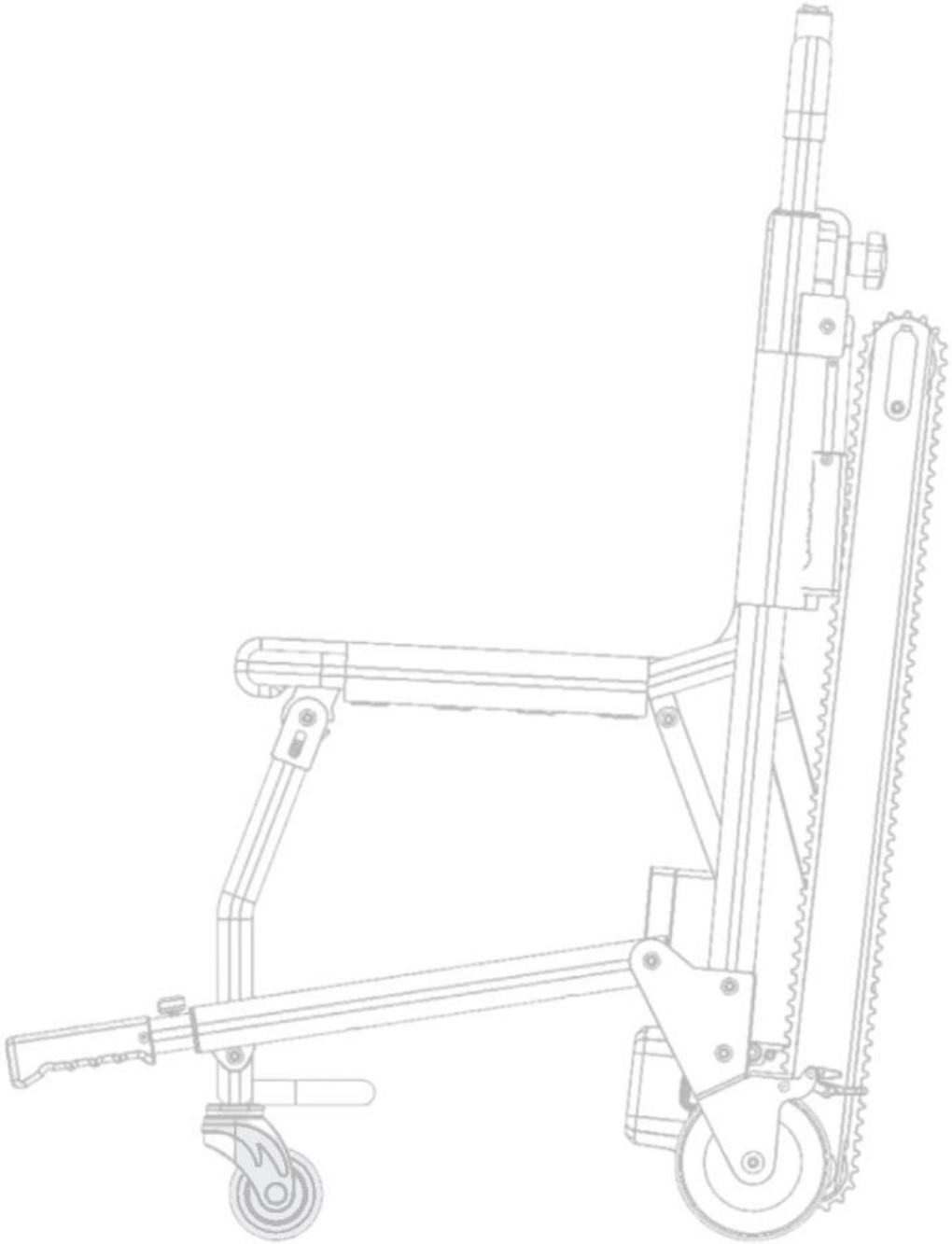

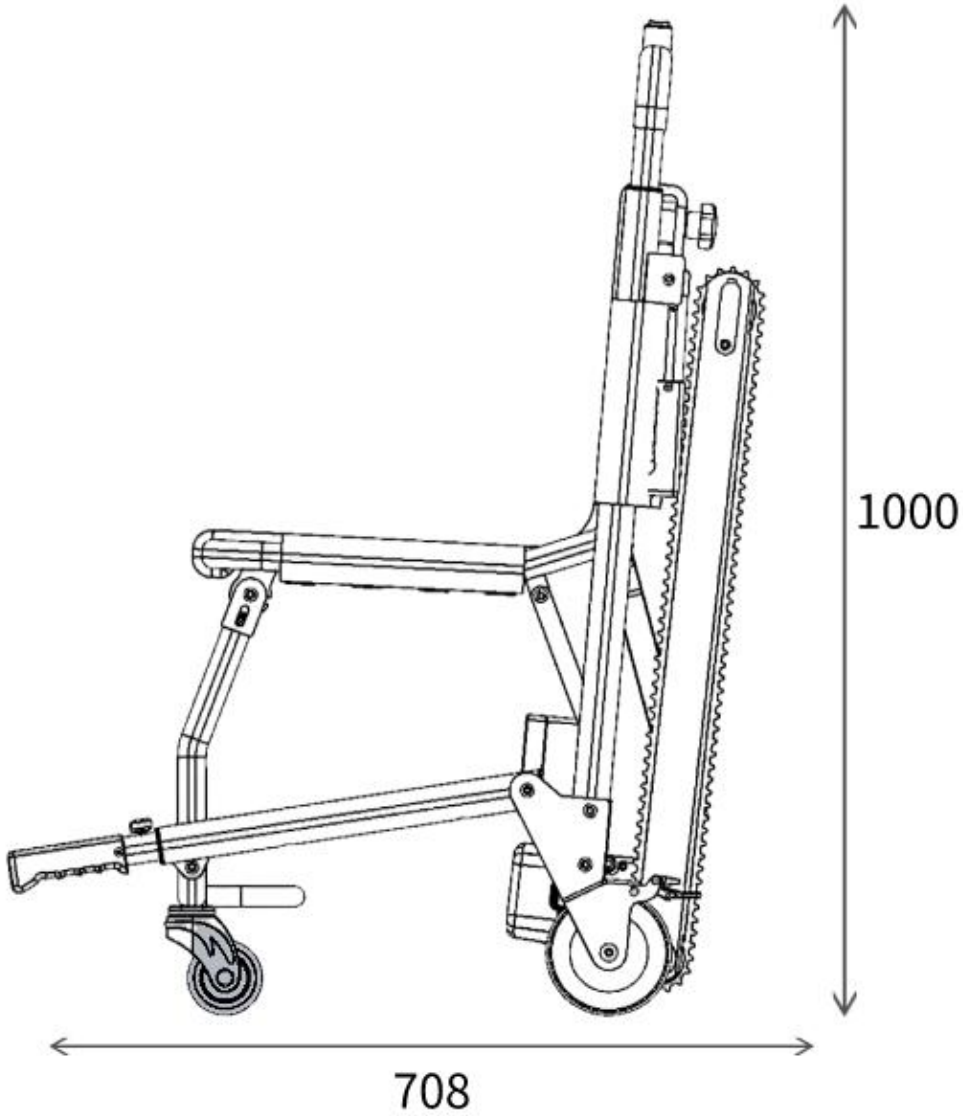
1000
708

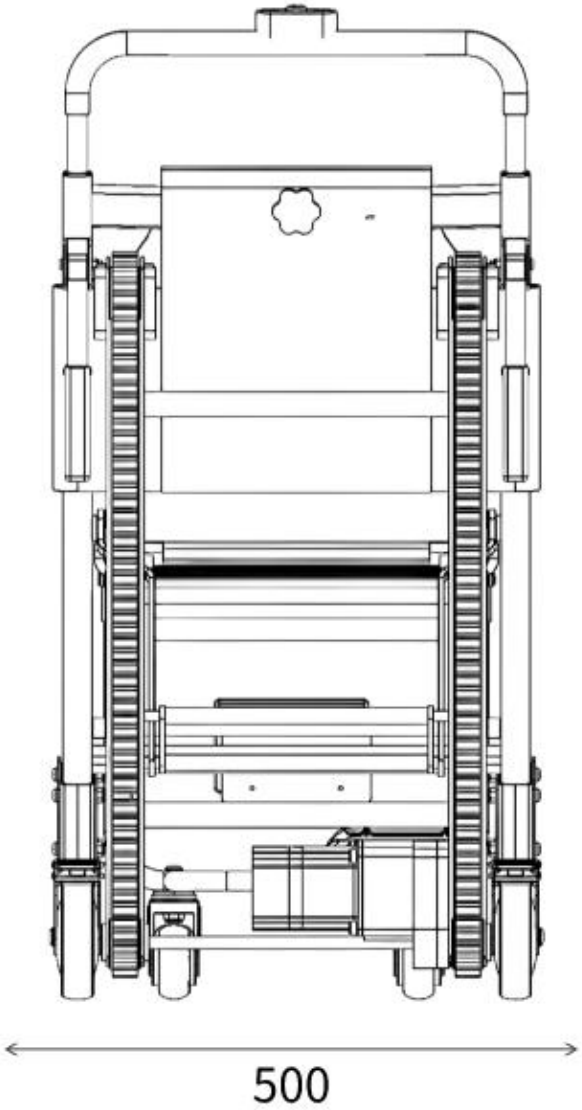
500

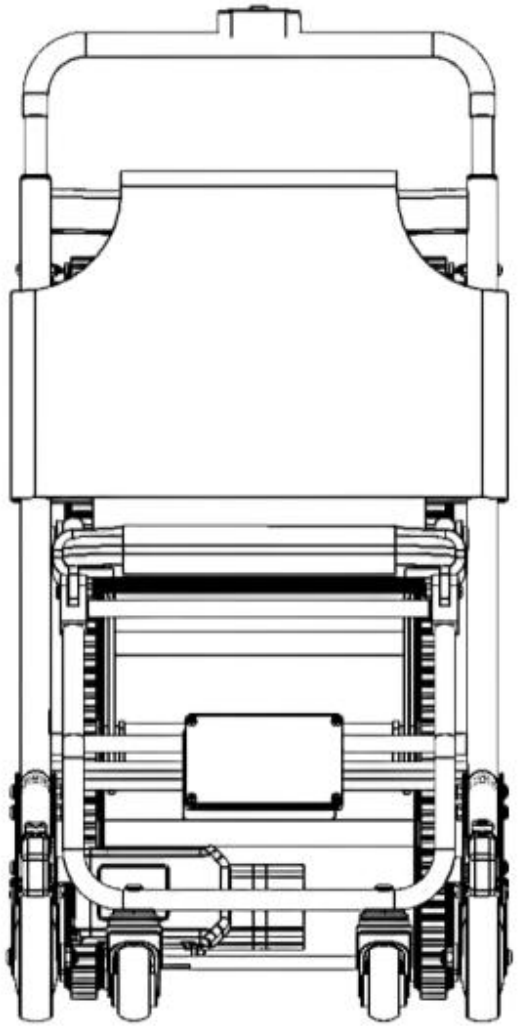

**Cushion Size: 360*500**

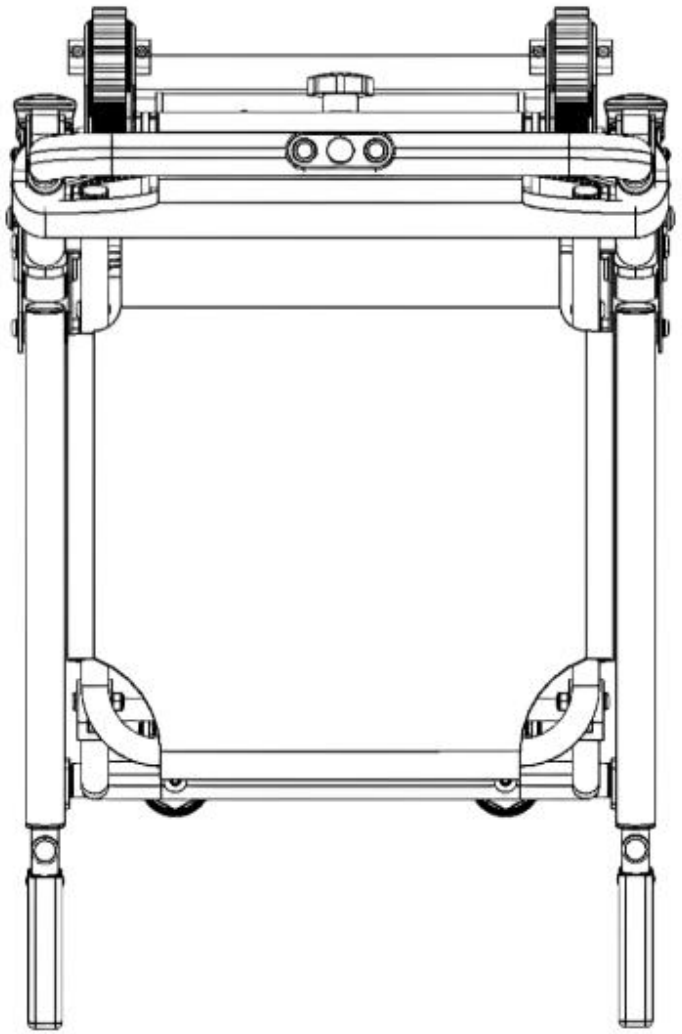

**Backrest Size: 390*400**

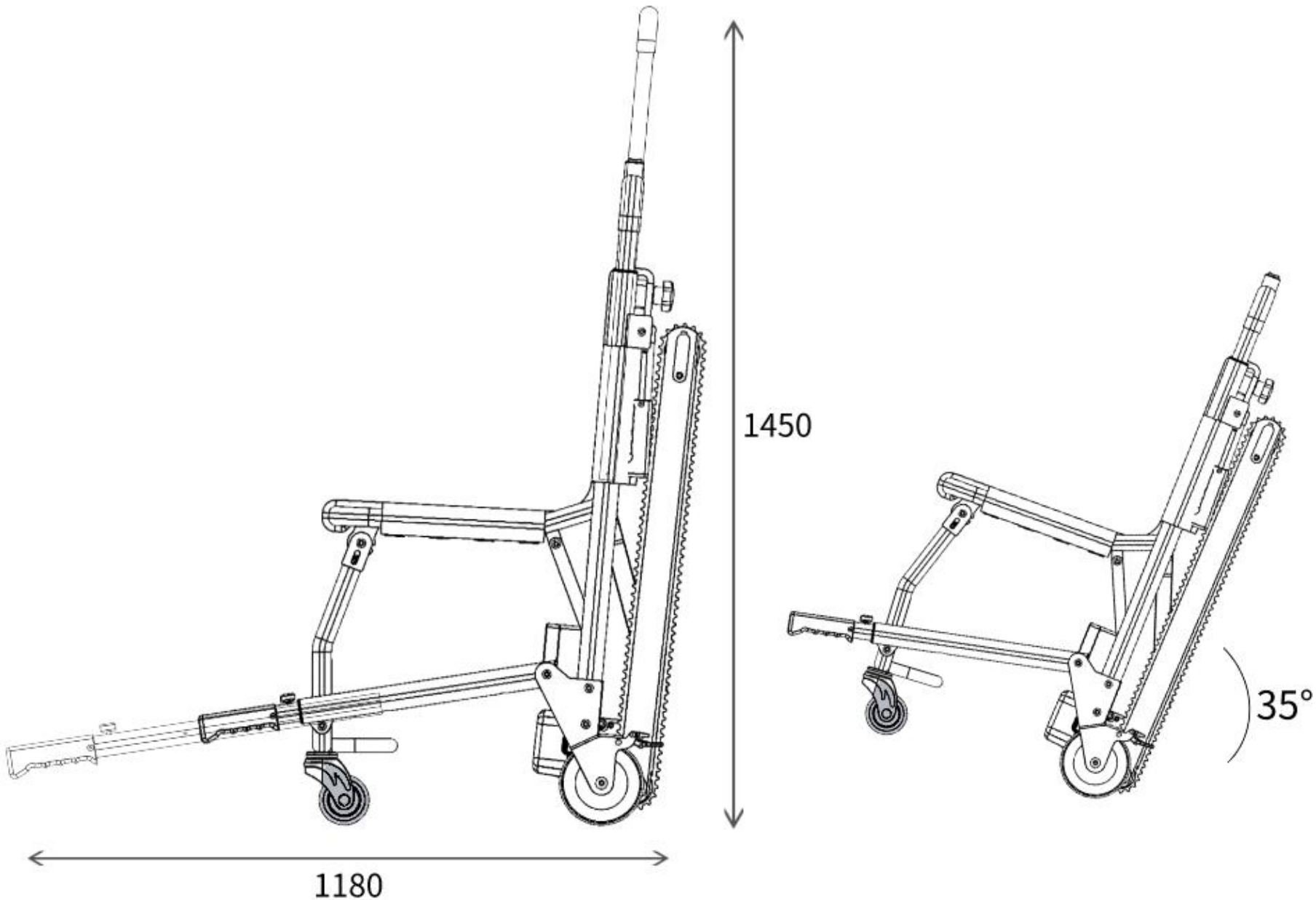
1450
1180
35°

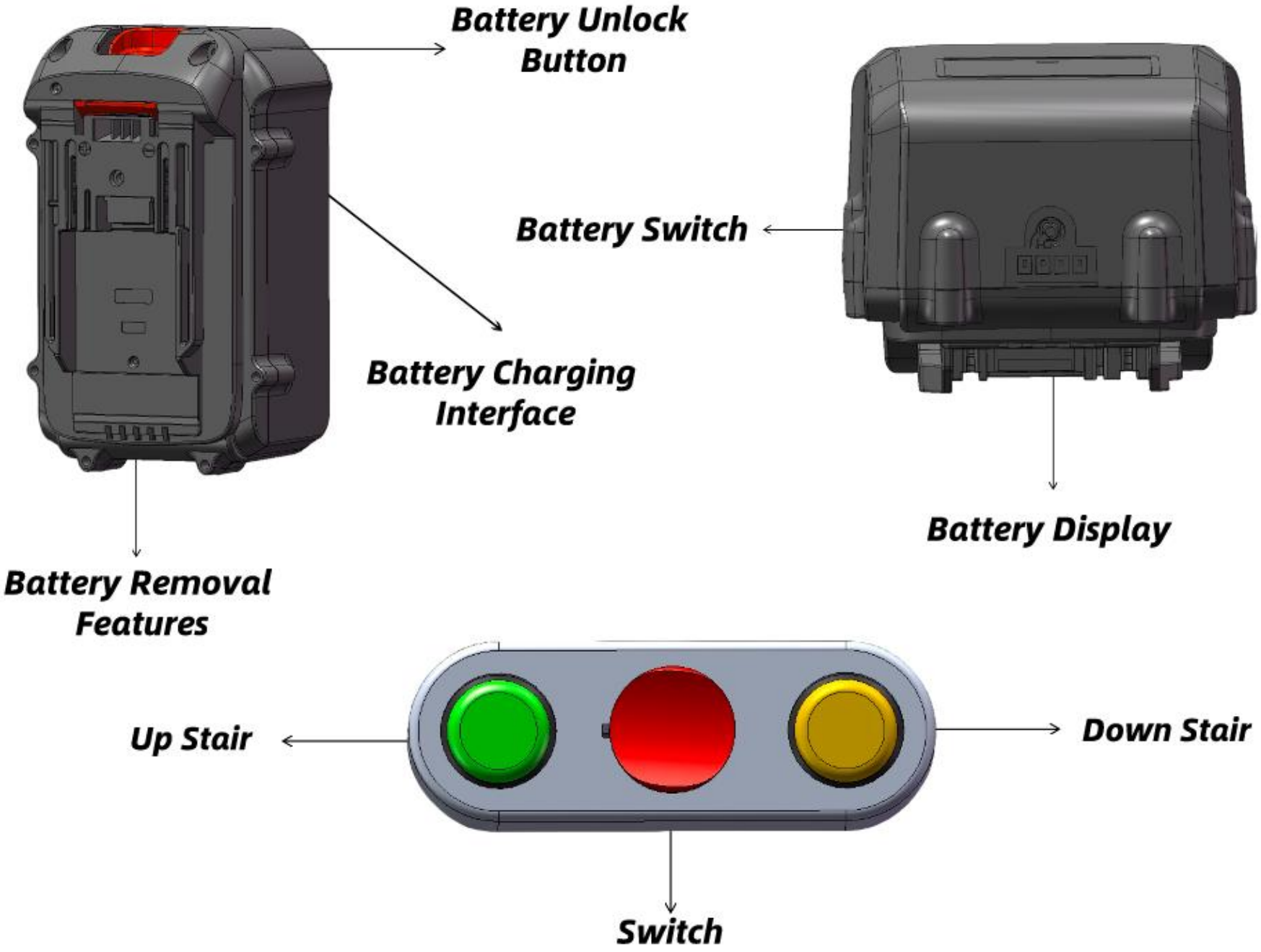
Battery Unlock Button
Battery Switch
Battery Charging Interface
Battery Display
Battery Removal Features
Up Stair
Down Stair
Switch

# Technical Date

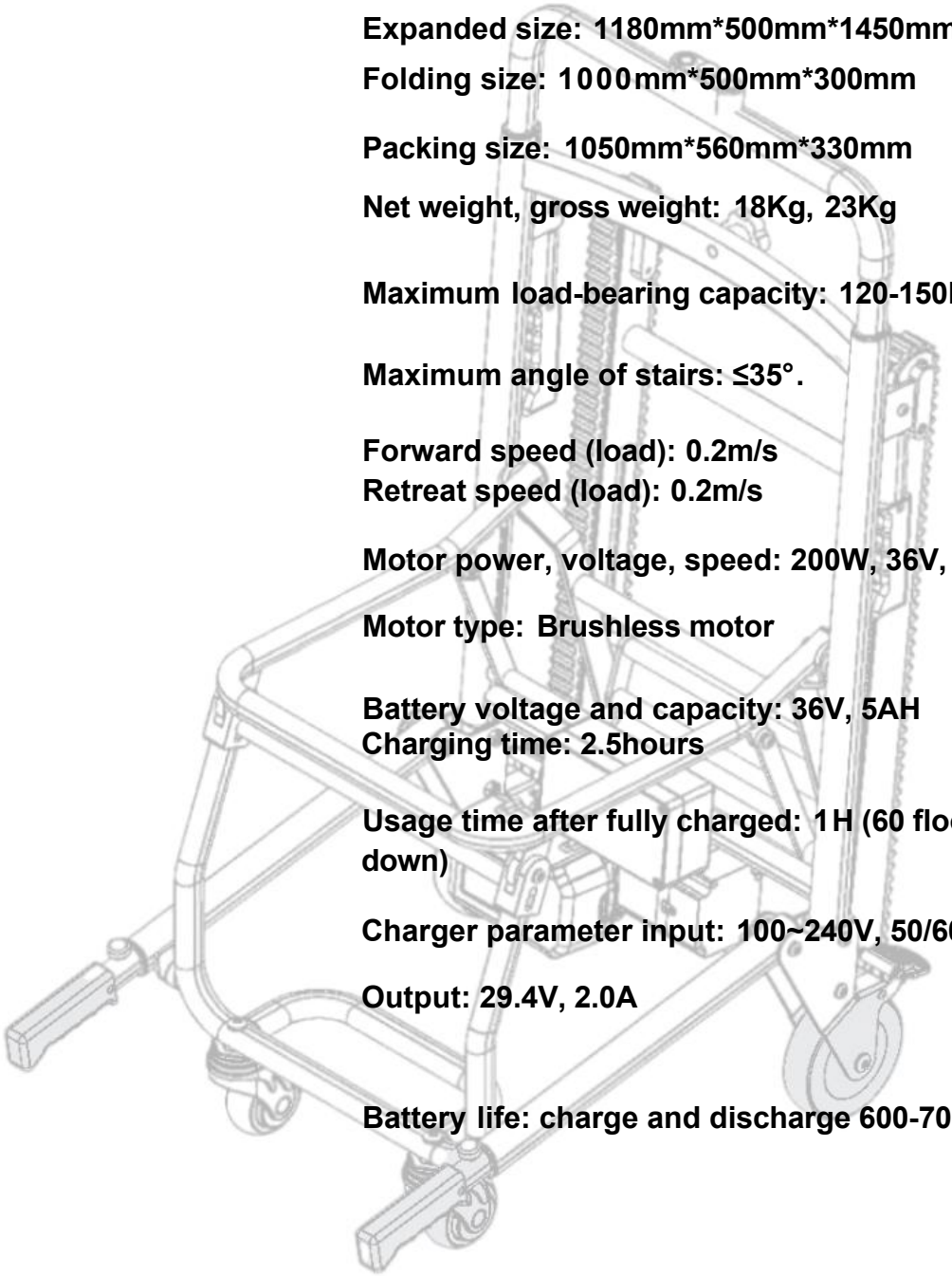

**Expanded size: 1180mm*500mm*1450mm**

**Folding size: 1000mm*500mm*300mm**

**Packing size: 1050mm*560mm*330mm**

**Net weight, gross weight: 18Kg, 23Kg**

**Maximum load-bearing capacity: 120-150Kg**

**Maximum angle of stairs: ≤35°.**

**Forward speed (load): 0.2m/s**
**Retreat speed (load): 0.2m/s**

**Motor power, voltage, speed: 200W, 36V, 3000,**

**Motor type: Brushless motor**

**Battery voltage and capacity: 36V, 5AH**
**Charging time: 2.5hours**

**Usage time after fully charged: 1H (60 floor up and down)**

**Charger parameter input: 100~240V, 50/60Hz, 2.0A**

**Output: 29.4V, 2.0A**

**Battery life: charge and discharge 600-700 times**

# Lithium Battery

## Prevent Electric Shock and Fire When Handling Batteries.

- Do not use if the battery case is damaged, scratched, or smells bad.

(If there is any abnormality, please contact the dealer or our company immediately.)

Please do not pour water on the battery or put it in water.

Failure to do so may result in heat generation, fire, damage or malfunction.

Do not disassemble or replace the battery.

- Do not throw the battery into fire or overheat it.

Failure to do so may result in heat generation, fire, damage or malfunction.

## Prevent electric shock and fire when handling fully charged electrical appliances.

- Do not use the appliance with other electrical equipment, otherwise it may cause fire or explosion.
- Please do not get the appliance wet or use it in the rain.

Failure to do so may result in electric shock or fire.

- Insert the power plug fully. Incomplete insertion may cause heat generation, resulting in electric shock or fire.
- Please do not put anything on the wire or fix the wire by pinching.

Failure to do so may result in fire or electric shock.

- Do not touch the power plug or touch the charging terminal with wet hands. Dangerous to touch.
- Do not pick up or wrap the power cord on the main body of the charger when using it.A damaged power cord may cause fire or electric shock.

Please do not drop the rechargeable battery or subject it to shock.

Failure to do so may result in heat generation, fire or damage.

## Prevent electric shock and fire when fully charged.

- Do not use outlets or wiring devices that exceed the ratings.

Multiple wires, etc. that exceed the rating may cause heat generation and fire.

Please do not let your skin touch the same part of the charger for a long time while charging. Failure to do so may result in cryogenic injury.

- Keep out of reach of children and pets. Failure to do so may result in electric shock, fire or malfunction.
- Do not cover or place anything on the battery while charging. The interior may catch fire and start a fire.
- Please do not charge the battery near flammable substances such as gasoline or combustible gas. Doing so may result in fire or overheating.
- Regularly remove dust from the power plug. Insulation failure due to moisture etc. may cause a fire.

Do not use if the power cord is damaged. There is a risk of fire or electric shock.may cause a fire.

# Lithium Battery

## Lithhium-ion batteries are lightweight and have excellent battery capacity, but have the following characteristics

- Performance will degrade in very hot/cold environments.
- Even if the battery is not used, it will avoid fugitive discharge.
- It can be charged regardless of the remaining power.
- Reverse charging a fully charged battery will accelerate fatigue.

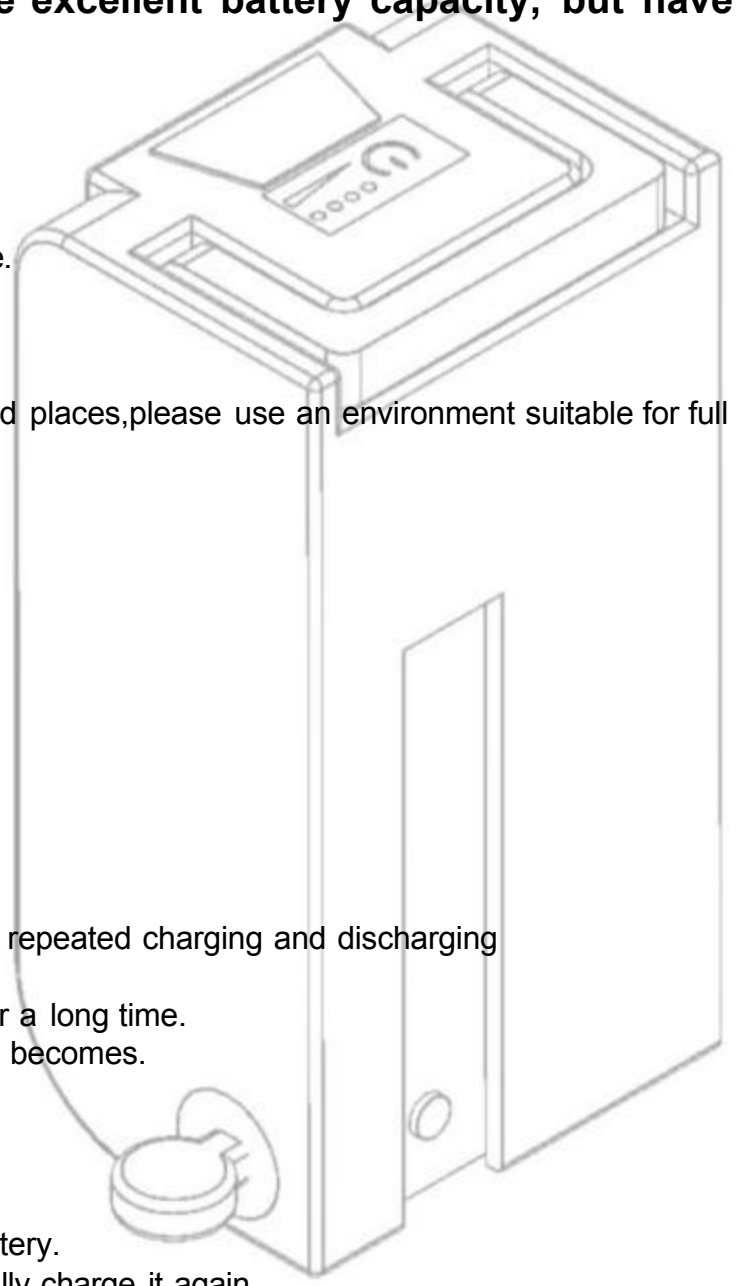

## Suitable for fully charged environment

Charging may not be performed properly in extremely hot or cold places,please use an environment suitable for full charging below.

- The indoor temperature is between 15 and 25 。C.
- A place that will not get wet from rain or water.
- A place not exposed to direct sunlight.
- A place with good ventilation and no humidity.
- A place out of reach of babies and pets.

## Battery life and replacement

The battery capacity will drop to about half of the new one after repeated charging and discharging (700~900 cycles). In addition,
the battery capacity will gradually decrease after being stored for a long time.
The lower the battery capacity, the shorter the range per charge becomes.
If there is no sign of recovery even .
after charging, it is time to replace the battery.
Please replace the battery as soon as possible.
In this case, a replacement fee will be charged.
One cycle" of charge and discharge refers to a fully charged battery.
Use it until the remaining battery power reaches 0 (zero), then fully charge it again.

## Lithium Battery

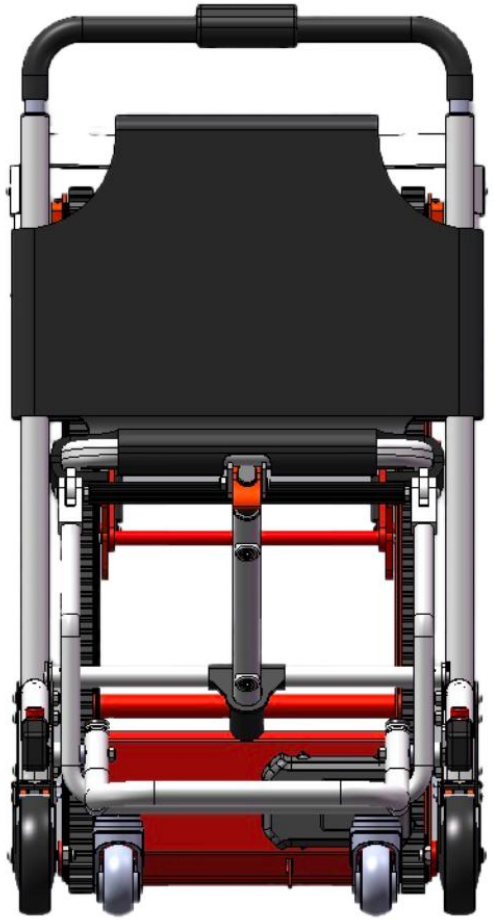

Displays 4 power levels based on battery consumption.

100% 75% 50% 25%.

Please charge when the battery power reaches 25%

When it's time to charge

Please remove the battery

Open the circular port and charge safely

# Accessories Introduction

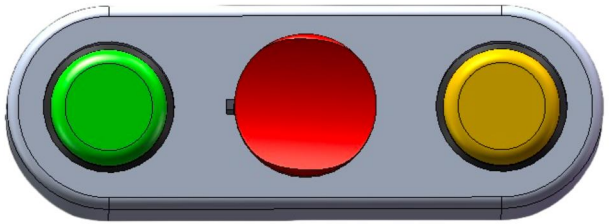

Control Switch

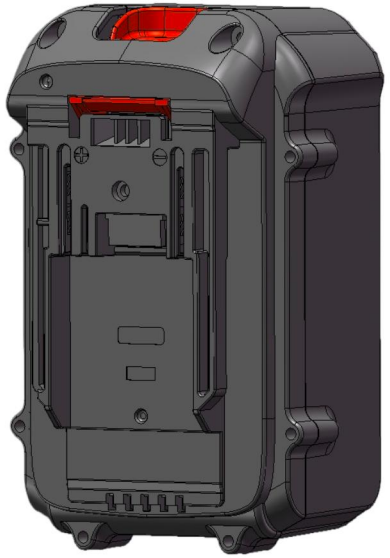

Lithium Battery

Lever Adjustment Knob

**Rubber Wheel**

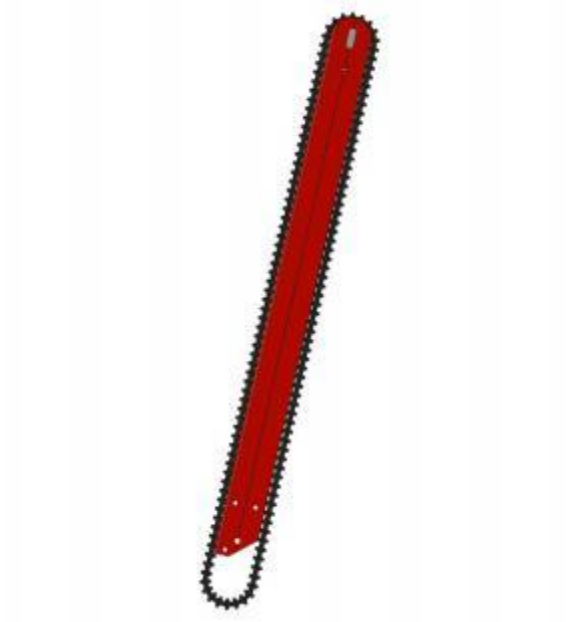

**Rubber Tracks**

**Brushless Motor**

# Manual

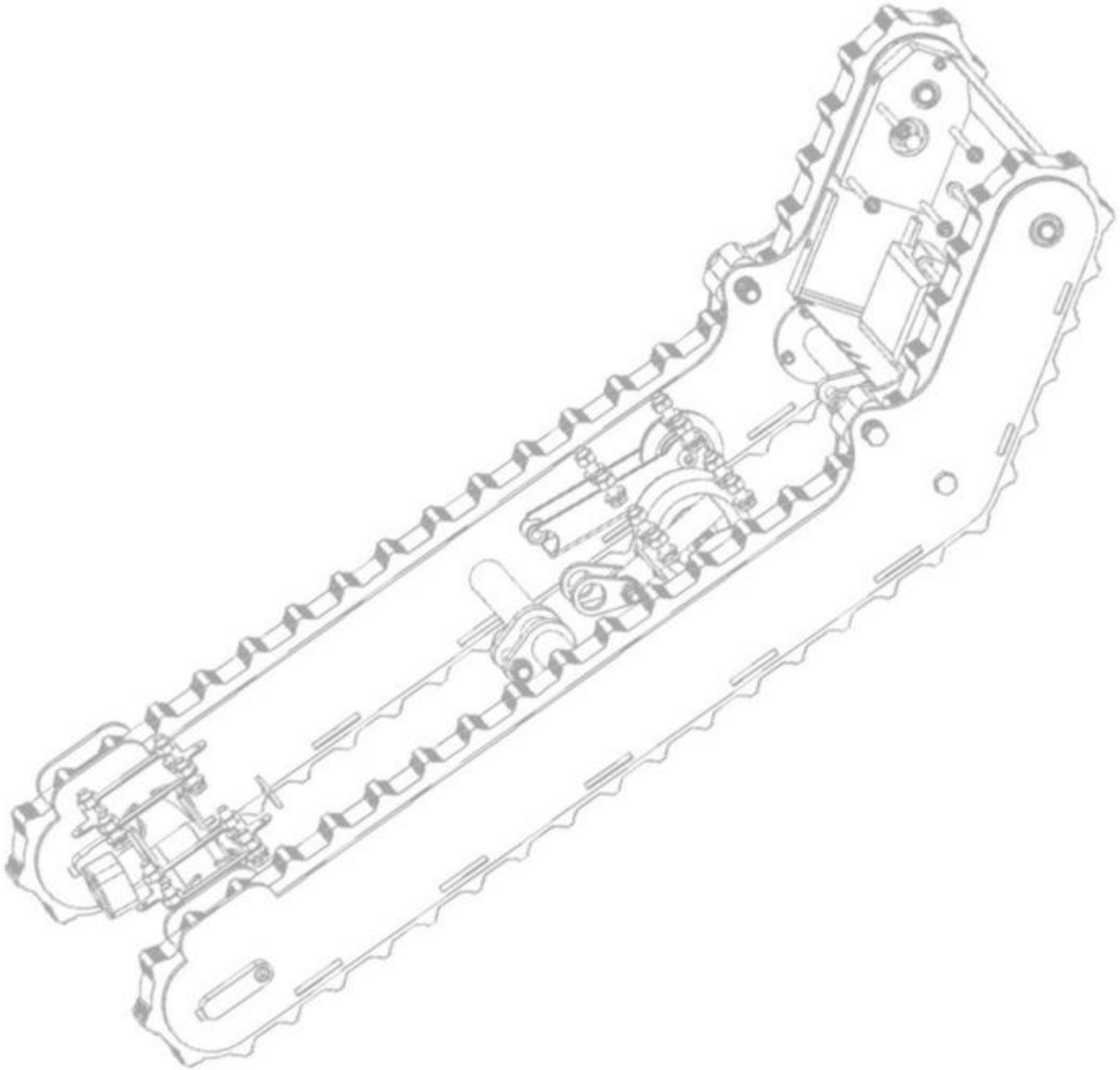

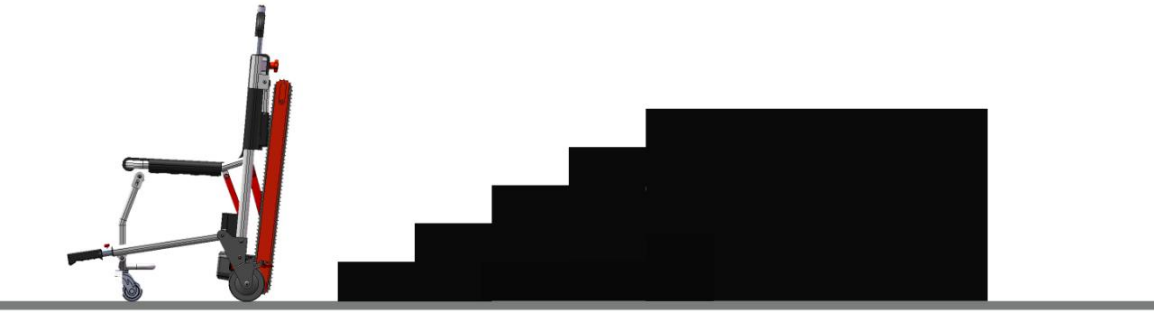

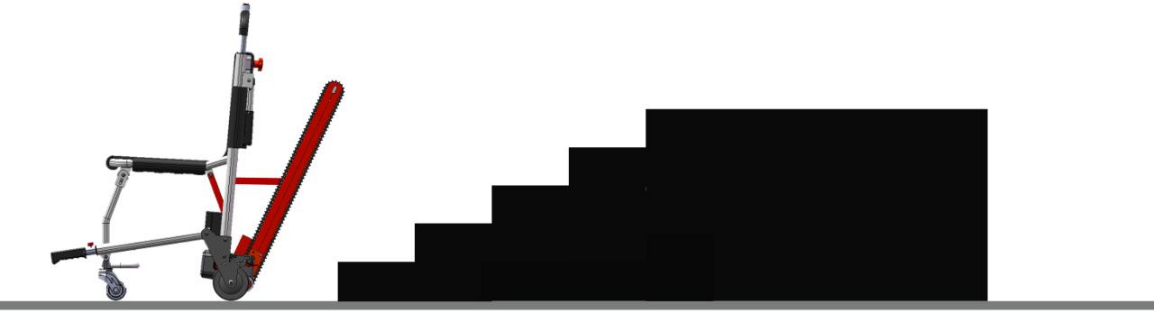

**EMSS-19B Check before climbing stairs**

**Are the stairs damaged or missing corners?**

**Is the battery connected correctly?**

**Is the control rocker normal?**
**(Whether all functions can be used normally)**

**Is the patient securely restrained with a safety harness?**

**Are the tracks parallel to the stairs?**

**(It is recommended to practice climbing stairs first after purchasing, and do not ride on the patient)**

EMSS-19B  continues to climb stairs

When the track is about to touch the last step

Please continue climbing the stairs

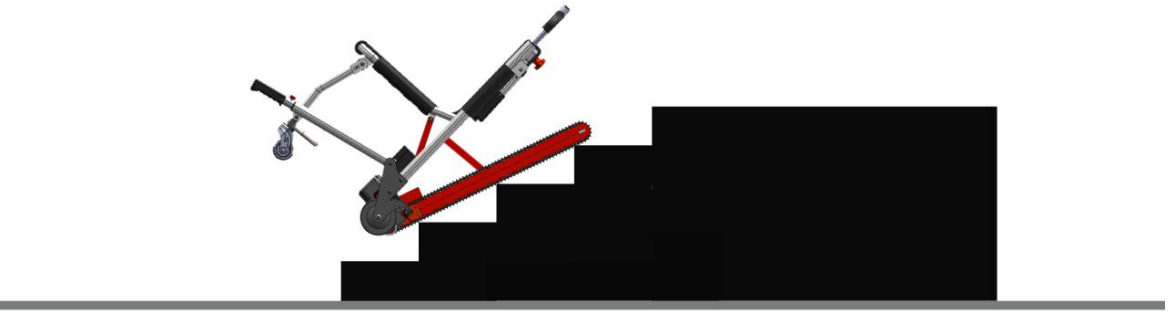

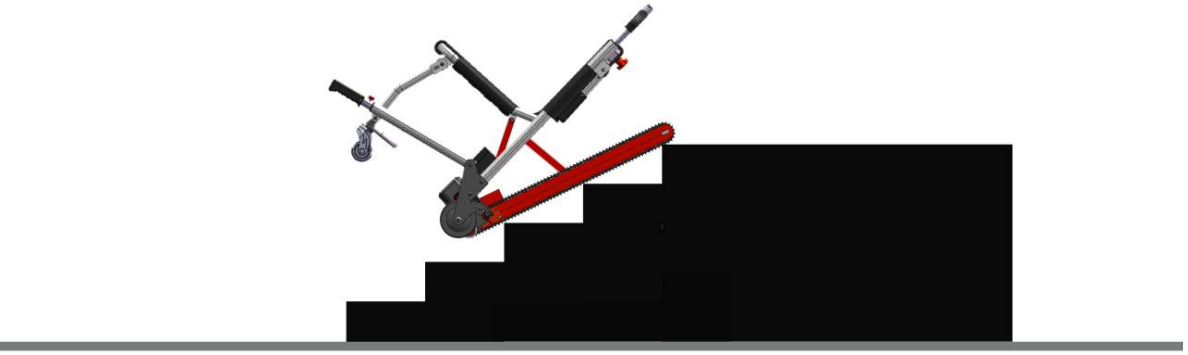

The track part of EMSS-19B only touches one step

Please keep the tracks in contact with the steps

until the tracks can touch the ground

**until the tracks touch the ground**

**When the track of EMSS-19B touches the ground**

**Please continue to use the crawler to crawl on the ground**

**Until EMSS-19B can fully contact the ground**

**Stop climbing stairs and fold the tracks**

**EMSS-19B climbs down stairs**

**Open the crawler unit first**

**Tilt the EMSS-19B and use the crawlers to climb down the stairs**

When the crawler unit of EMSS-19B touches the first step

Please continue climbing downstairs and try to reach the second step.

Make the crawler tracks of EMSS-19B touch three steps and continue climbing down.

Please keep the path of the track in a straight line (empty training and control lever practice are required)

When EMSS-19B is about to reach the last step

Please keep crawling

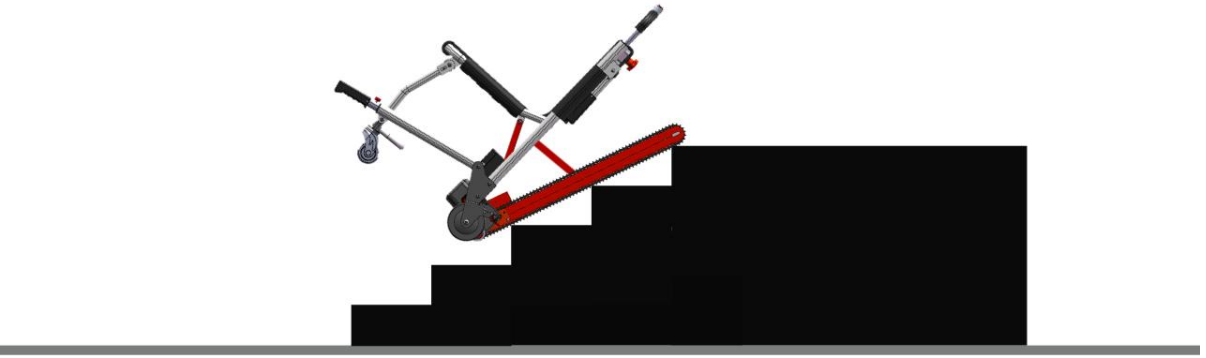

When the track part of EMSS-19B touched the ground

Folding track section

Completed the stair climb

# Packing List

EMSS-19B

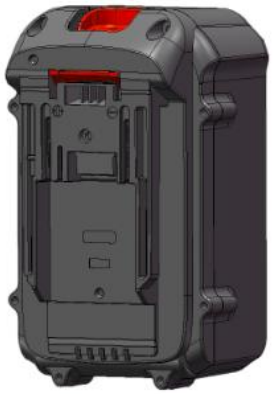

Lithium Battery

Charger

Cargo Safety Belt

# JiangSu Emss Science And Technology Co.,Ltd

**WWW.EMSSROBOT.COM**

**Plant 6, Tongyang Town Industrial Concentration Zone, Shuyang County, Suqian, Jiangsu, China**